ENGINE ROOM EXPLAINED

THE MAIN ENGINE

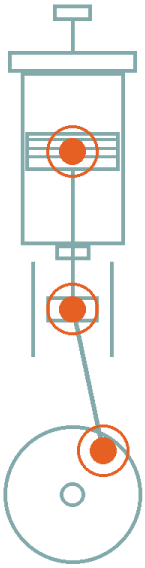

BOOK 1

How it works · What goes wrong
How to fix it

INTERACTIVE EDITION

Tap any part · animated systems · oral exam practice

S M EFTAKHARUL ISLAM
Marine Engineer · Class 1 COC (Malaysia)

ENGINE ROOM EXPLAINED · BOOK 1

THE MAIN ENGINE

How it works · What goes wrong · How to fix it

S M EFTAKHARUL ISLAM

Marine Engineer · Class 1 COC (Malaysia)

THE MAIN ENGINE

Engine Room Explained, Book 1

© 2026 S M Eftakharul Islam / Engine Room Explained

For training and reference. Always follow the engine maker’s instructions and your company’s procedures.

Set in Barlow Condensed and IBM Plex Sans.

CONTENTS

01	The two-stroke cycle	6
02	Structure and running gear	24
03	Piston, piston rod and stuffing box	44
04	Cylinder liner and cylinder lubrication	61
05	Turbocharger and scavenge air	77
06	Exhaust valve	93
07	Fuel injection	108
08	Starting air and reversing	123
09	Main lubricating oil	138
10	Cooling water	151
11	Control and safety devices	165
12	Emergencies	180
13	Performance monitoring	197
14	Electronically controlled engines (ME-C and ME-B)	213
15	Rules, environment and the main engine	230
	Video lessons	244

CHAPTER 1

THE TWO-STROKE CYCLE

WATCH THE VIDEO LESSON

Scan with your phone camera: How a marine two-stroke engine works, on the Engine Room Explained channel.

youtu.be/k7fKDcHJpdY

IN THIS CHAPTER

- How it works
- Timing and typical values
- Theory and calculations
- On board: what the cycle tells you
- Problems and solutions
- Safety precautions
- Rules on board
- Exam questions and answers
- Quick revision
- Watch the video

YOU WILL BE ABLE TO

- Name the main running parts of one cylinder and say what each does
- Describe the six stages of one revolution in order, with approximate crank angles
- Explain why the exhaust valve opens before the scavenge ports are uncovered
- Explain uniflow scavenging and why it needs pressurised air
- Link common faults, such as low compression pressure, to the stage of the cycle they affect

A slow-speed two-stroke engine completes its whole cycle in one revolution, so every downstroke of every piston is a power stroke. That is why this engine type drives most of the world's large cargo ships.

The engine is tall, slow and simple in principle. It can stand as high as a four-storey building, yet turns only one to two revolutions per second. It burns low-grade fuel and still turns about half of the fuel's energy into work.

Every other system in this book serves this cycle: the turbocharger supplies its air, the fuel system times its injection, and the lubrication and cooling systems keep its parts alive. Learn this chapter well and the rest follows.

HOW IT WORKS

Air enters through ports at the bottom of the cylinder liner and exhaust leaves through a single valve at the top. Because air and gas travel in one direction only, this is called uniflow scavenging.

The parts of one cylinder

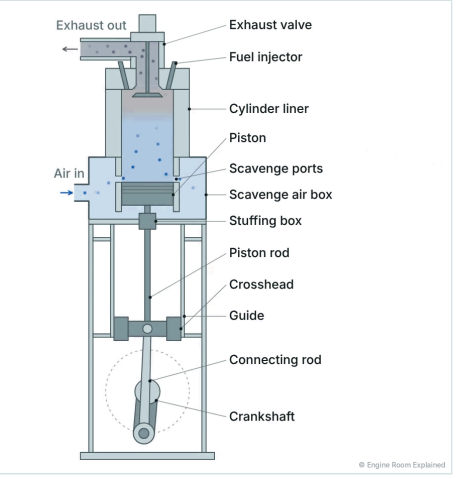

FIGURE 1.1 Cross-section of one cylinder with the parts labelled (still from the animation).

PART	WHAT IT DOES
Exhaust valve	A single valve in the centre of the cylinder cover. It is opened by hydraulic oil pressure and closed by an air spring.
Cylinder liner	Forms the cylinder wall. A ring of scavenge ports is cut near its lower end.
Scavenge ports	Admit fresh air when the piston uncovers them. They are angled so the air swirls as it rises.
Piston	Carries the gas load. Its rings seal the combustion space, and on modern engines oil cools it from inside.
Piston rod	Connects the piston rigidly to the crosshead. It moves only up and down.
Stuffing box	Seals the piston rod where it passes from the scavenge space into the crankcase.
Crosshead and guides	Join the piston rod to the connecting rod. The guides take the side thrust, so the liner does not.
Connecting rod	Converts the straight-line motion of the crosshead into rotation.
Crankshaft	Collects the work of all cylinders and delivers it to the propeller shaft.

The crosshead is what sets this engine apart from a trunk-piston engine. It allows a very long stroke, four or more times the bore, and lets the stuffing box separate the cylinder from the crankcase, so dirty combustion residues stay out of the system oil.

One revolution, stage by stage

Angles are measured from top dead centre (TDC), in the direction of rotation. We start with the piston near the bottom of its stroke.

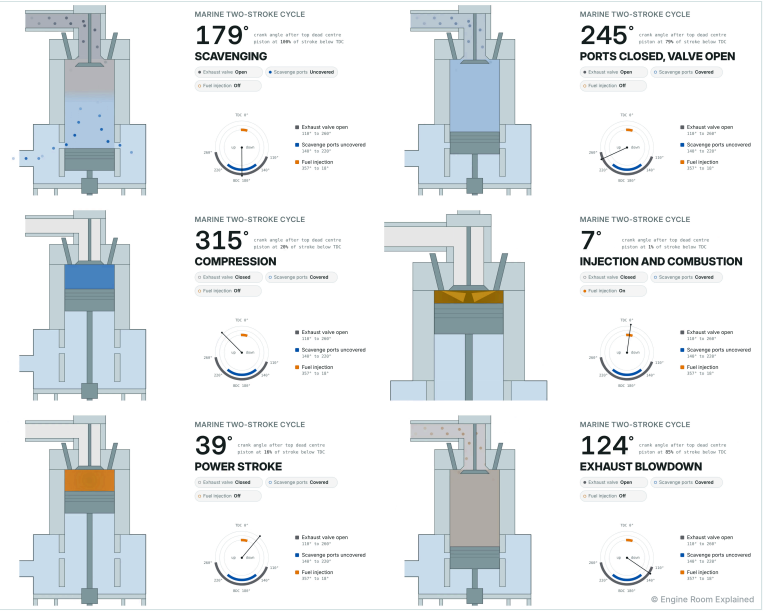

FIGURE 1.2 The six stages, one still for each (from the animation).

1. **Scavenging, 140° to 220°.** The piston has uncovered the scavenge ports. Pressurised air enters at the bottom and sweeps the exhaust gas straight up and out through the open exhaust valve.
2. **Ports covered, valve still open, 220° to 260°.** The rising piston covers the ports. The exhaust valve stays open until the piston is about a third of the way up, so the last of the exhaust gas is pushed out.
3. **Compression, 260° to 357°.** The exhaust valve closes and the trapped air is compressed. Its temperature rises above 500 °C, well above the temperature at which the fuel ignites by itself.
4. **Injection and combustion, 357° to 18°.** Fuel is sprayed into the hot air just before TDC. It ignites without a spark, and cylinder pressure peaks shortly after TDC. (On S-MC engines the maker delays ignition to 2 to 3° after TDC, so that Pmax is never more than 35 bar above Pcomp.)
5. **Power stroke, 18° to 110°.** The expanding gas drives the piston down. The piston rod pushes the crosshead, and the connecting rod turns the crankshaft.
6. **Exhaust blowdown, 110° to 140°.** The exhaust valve opens before the ports are uncovered. Cylinder pressure falls below scavenge air pressure, and the released gas goes on to drive the turbocharger.

The piston then uncovers the ports and the cycle starts again.

Why the order of events matters

The exhaust valve must open before the ports. If the ports were uncovered while the cylinder was still at high pressure, hot gas would blow down into the scavenge space, fouling it and possibly starting a scavenge fire.

The engine cannot breathe by itself. Unlike a four-stroke, it has no suction stroke, so air must be pushed in during the short time the ports are open. The turbocharger does this at normal load, and electric auxiliary blowers do it at low load and when starting.

TIMING AND TYPICAL VALUES

The scavenge ports open and close at equal angles either side of bottom dead centre (BDC), but the exhaust valve does not. The piston controls the ports, so their timing is fixed by geometry. The exhaust valve has its own actuator, so the designer can open it early for blowdown and close it late or early to set the compression pressure.

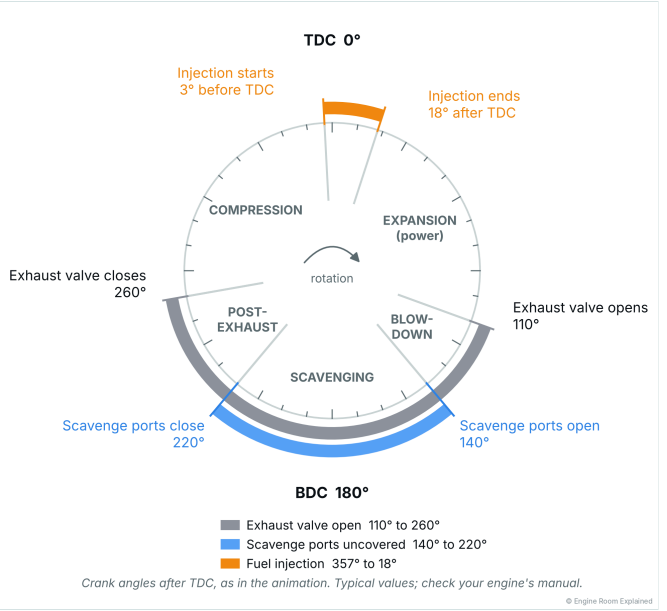

FIGURE 1.3 Timing diagram for one revolution (the ring from the animation).

EVENT	CRANK ANGLE AFTER TDC	POSITION RELATIVE TO BDC
Fuel injection ends	18°	18° after TDC
Exhaust valve opens	110°	70° before BDC
Scavenge ports uncovered	140°	40° before BDC
Scavenge ports covered	220°	40° after BDC
Exhaust valve closes	260°	80° after BDC
Fuel injection starts	357°	3° before TDC

These timings are typical for a slow-speed uniflow engine and vary with model and load. On electronically controlled engines, injection and exhaust valve timings change with load while running.

QUANTITY	TYPICAL VALUE AT FULL LOAD
Engine speed	Below about 120 rpm
Scavenge air pressure	About 3 bar gauge (2.65 bar on our S50MC-C at full load)
Compression pressure	120 to 180 bar, depending on engine generation
Maximum cylinder pressure	140 to 200 bar, reached about 10° to 15° after TDC
Air temperature at end of compression	Above 500 °C

Always take the real figures for your engine from the shop trial and sea trial records. Examiners expect you to know the values for your last ship.

THEORY AND CALCULATIONS

The written papers (EKM, Engineering Knowledge Motor) expect you to explain the cycle with a p-V diagram and to work simple numbers on it. This section gives the theory you need and one worked example for each formula.

The ideal cycle and the real engine

No real engine follows a textbook cycle exactly, but the **dual (mixed) combustion cycle** is the closest model of a slow-speed diesel:

1. **Compression (1 to 2):** the trapped air is compressed. Pressure and temperature rise.
2. **Heat added at constant volume (2 to 3):** the first fuel burns very fast near TDC, so pressure rises sharply while the piston hardly moves.
3. **Heat added at constant pressure (3 to 4):** the rest of the fuel burns as the piston starts down, so pressure stays roughly level.
4. **Expansion (4 to 5):** the gas drives the piston down. This is the power stroke.
5. **Heat rejected (5 to 1):** in the real engine this is exhaust blowdown and scavenging.

The area enclosed by the loop on the p-V diagram is the work done per cycle. That is why the indicator card (Chapter 13) is drawn on these axes.

The **air-standard efficiency** of every such cycle rises with compression ratio. For the simplest (Otto) form:

η = 1 − 1 ÷ r^(γ − 1), where r is the compression ratio and γ = 1.4 for air.

The diesel and dual cycles are a little less efficient than Otto at the same r, but diesels run at much higher compression ratios, so in practice they are more efficient. A modern slow-speed engine turns about half of the fuel's energy into work.

Geometric and effective compression ratio

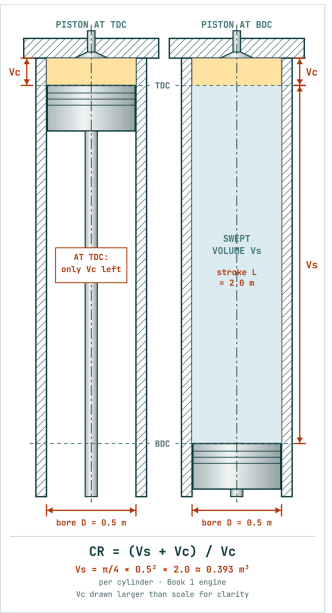

DETAIL Compression ratio compares volumes, not pressures: swept plus clearance volume over clearance volume.

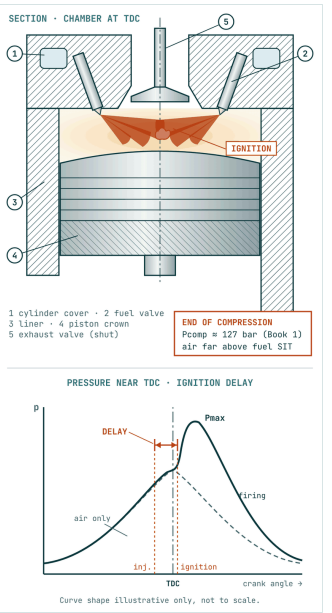

DETAIL No spark plug: air compressed to a high temperature lights the fuel after a short ignition delay.

Geometric compression ratio = (swept volume + clearance volume) ÷ clearance volume.

On a uniflow engine compression cannot start until the exhaust valve closes, so the volume at exhaust valve closing is what matters. This gives the **effective compression ratio**, which is lower than the geometric one. That is why exhaust valve closing time controls compression pressure: close it later and Pcomp falls; close it earlier and Pcomp rises.

Compression pressure and temperature

Compression is close to polytropic, **pV^n = constant**, with n about 1.35 (heat is lost to the cooled liner, so n is below 1.4).

p2 = p1 × r^n and **T2 = T1 × r^(n − 1)**, using absolute pressures and temperatures in kelvin.

WORKED EXAMPLE

Air is trapped at 3.6 bar absolute and 45 °C (318 K). The effective compression ratio is 15 and n = 1.35. (Example figures.)

- p2 = 3.6 × 15^1.35 = 3.6 × 38.7 = **139 bar absolute** (about 138 bar gauge)
- T2 = 318 × 15^0.35 = 318 × 2.58 = 820 K = **547 °C**

This is why the air is hot enough to ignite the fuel without a spark: the fuel's self-ignition temperature is far below 547 °C.

Indicated power and mean indicated pressure

Mean indicated pressure (pmi) is the constant pressure that, acting over the whole power stroke, would do the same work as the real cycle. It is found from the indicator card (Chapter 13).

For a two-stroke engine every revolution is a power stroke, so for one cylinder:

Indicated power, Pi = pmi × A × L × N

where pmi is in pascals, A is the piston area in m², L is the stroke in m, and N is the speed in revolutions per second. (A four-stroke fires every second revolution, so N is halved.)

WORKED EXAMPLE: OUR S50MC-C AT FULL LOAD

Bore 500 mm, stroke 2,000 mm, 120 rpm, pmi 20 bar, 6 cylinders, mechanical efficiency 95%.

- A = π ÷ 4 × 0.5² = 0.196 m²
- N = 120 ÷ 60 = 2.0 rev/s
- Pi per cylinder = 20 × 10⁵ × 0.196 × 2.0 × 2.0 = 1,568 **kW**
- Pi for the engine = 6 × 1,568 = 9,408 **kW**
- Brake power = 0.95 × 9,408 = about 8,940 **kW**. The shipyard got 8,933 kW the same way from the sea trial indicator cards at 100% load (pmi 19.91 bar, 120.4 rpm). The engine's rated power (MCR) is 8,700 kW at 120 rpm.

Mean piston speed

Mean piston speed = 2 × L × rpm ÷ 60. For the S50MC-C: 2 × 2.0 × 120 ÷ 60 = 8.0 **m/s**. Piston speed limits ring and liner wear, which is why a long-stroke engine must turn slowly. Slow turning also suits a large, efficient propeller, so the engine can drive it directly with no gearbox.

Scavenging terms

- **Delivery ratio:** mass of air delivered per cycle ÷ the mass that would fill the swept volume at scavenge conditions. It is usually above 1, because some air goes straight out of the exhaust valve.
- **Trapping efficiency:** mass of air kept in the cylinder ÷ mass delivered.
- **Scavenging efficiency:** mass of fresh air in the trapped charge ÷ total mass of the trapped charge (fresh air plus leftover exhaust gas). Uniflow scavenging gives the highest scavenging efficiency of the three types.

Why a two-stroke does not give twice the power

A two-stroke fires every revolution, twice as often as a four-stroke, but it does not give twice the power from the same cylinder. Part of each stroke is used for blowdown and scavenging rather than expansion, so the effective stroke is shorter. Some of the charge is lost through the exhaust, and power is needed to supply the scavenge air. In practice the gain is roughly 1.5 to 1.8 times.

ON BOARD: WHAT THE CYCLE TELLS YOU

Most main engine faults show up as a change in one stage of the cycle, so ask which stage is affected before you ask which part has failed.

Compare one cylinder against the others first. A fault on one unit points to that unit's own parts. The same change on every unit points to something they share, usually the air supply or the fuel.

WHAT YOU SEE	STAGE AFFECTED	LIKELY CAUSES
Low compression pressure on one unit	Compression	Worn or broken piston rings, worn liner, leaking exhaust valve, burnt piston crown
Low compression pressure on all units	Scavenging	Low scavenge air pressure: fouled turbocharger, fouled air cooler, dirty air filters
Normal compression pressure but low maximum pressure	Injection and combustion	Late injection, worn fuel pump, faulty fuel valve, fuel with poor ignition quality
High exhaust temperature on one unit	Combustion and blowdown	Leaking exhaust valve, dribbling fuel valve, poor atomisation, blocked scavenge ports
High exhaust temperature on all units	Scavenging	Too little air: fouled turbocharger or air cooler, or high back pressure from a fouled exhaust gas boiler
Scavenge temperature rising on one unit, sparks or smoke at the scavenge drain	Scavenging	Scavenge fire, fed by oily deposits and started by blow-by past the piston rings
Heavy flow from a stuffing box drain	Sealing between cylinder and crankcase	Worn stuffing box rings or a worn piston rod

Remember the link: blow-by past worn rings carries hot gas into the scavenge space, and oily deposits there give it fuel. For the signs and actions of a scavenge fire, see Chapter 12.

PROBLEMS AND SOLUTIONS

These five problems all show up as a fault in the cycle itself: air not getting in, gas not getting out, or the charge not sealed or fired at the right moment. The most common come first. Problems with single components (rings, liner, exhaust valve, fuel valve, turbocharger) are covered in full in their own chapters.

PROBLEM 1.1

Low compression pressure in one unit

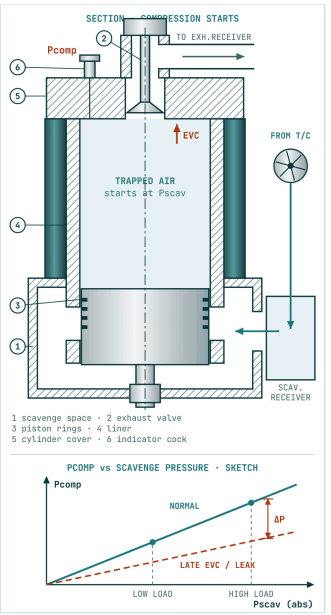

DETAIL Same compression ratio, different Pcomp: scavenge pressure, exhaust valve closing and leaks all change it.

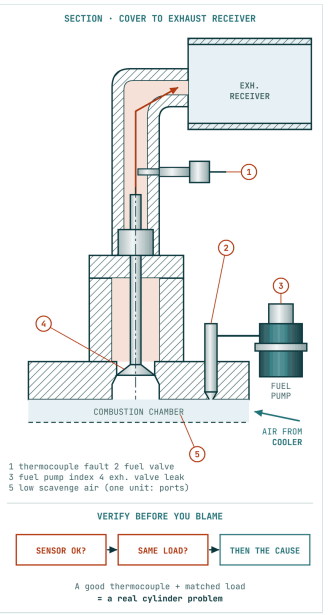

DETAIL One high exhaust temperature is a symptom. Prove the sensor and the load before blaming a part.

Signs on board:

- Pcomp of one unit clearly below the others on the indicator or the engine's monitoring system.
- Pmax of the same unit also low, while fuel index is normal or high.
- Exhaust temperature of that unit higher than the rest.
- During manoeuvring the unit may be slow to fire on starting.

Causes:

- Exhaust valve not closing fully: burnt or dented seat, valve sticking, air spring pressure low.
- Exhaust valve closing late (timing or hydraulic fault), so air escapes before compression starts.
- Piston rings worn, broken or stuck in their grooves (blow-by).
- Liner worn beyond limit, or piston crown burnt.
- Scavenge air pressure low for that unit because its scavenge ports are partly blocked.

Immediate action:

1. Take a fresh set of indicator readings and compare Pcomp with the other units and with shop test results.
2. Check the exhaust valve: closing time, air spring pressure, and listen for blowing at the valve.
3. At the next chance, stop and inspect through the scavenge ports: rings, crown and liner.
4. If blow-by is heavy, reduce load on the engine and temporarily increase the cylinder oil feed to that unit until the rings seal again, then return it to the normal rate.
5. Watch scavenge space temperature closely: blow-by can start a scavenge fire.

Permanent solution: Overhaul or renew the exhaust valve if the seat is leaking. Renew rings, and the liner or crown if worn beyond the maker's limits. Correct the valve timing if it is out.

Prevention:

- Take indicator readings regularly and trend Pcomp for each unit.
- Carry out scavenge port inspections at the intervals in the maker's manual.
- Keep cylinder oil feed rate and fuel quality correct so rings do not stick.

PROBLEM 1.2

High exhaust temperature in one unit

Signs on board:

- Exhaust gas temperature of one unit more than 50 °C above or below the average of all units (alarm; slowdown at 60 °C).
- Pmax lower than other units, often with Pcomp normal.
- Possible black smoke from the funnel.

Causes:

- Fuel valve faulty: poor atomisation, dribbling or a blocked nozzle hole.
- Injection too late (fuel pump timing or VIT fault), so combustion continues into the expansion stroke.
- Exhaust valve leaking, letting hot gas blow through.
- Too little scavenge air for that unit (blocked ports).
- Thermocouple faulty (always check this first).

Immediate action:

1. Check the thermocouple reading against a portable instrument.
2. Take indicator readings for that unit and compare Pmax and Pcomp with the others.
3. If the fuel valve is suspect, change it with a tested spare at the next stop.
4. Reduce the fuel index of that unit only if the maker allows it, to protect the exhaust valve and turbocharger.

Permanent solution: Pressure test and overhaul the fuel valve. Correct pump timing. Overhaul the exhaust valve if the seat is leaking. Clean the scavenge ports.

Prevention:

- Overhaul fuel valves at the maker's running hours.

- Treat and heat fuel correctly so viscosity at the injector is right.
- Trend exhaust temperatures daily and investigate any unit that drifts away from the average.

PROBLEM 1.3

Poor scavenging from fouled scavenge ports

Signs on board:

- Exhaust temperatures rising on all or several units over weeks.
- Scavenge air pressure higher than normal for the load, but less air reaching the cylinders.
- Grey or black smoke, and turbocharger running at higher speed than usual.
- Heavy deposits visible during scavenge port inspection.

Causes:

- Too much cylinder oil, or the wrong oil for the fuel sulphur content.
- Blow-by carrying carbon into the scavenge space.
- Poor combustion from bad fuel or faulty fuel valves.
- Scavenge space drains blocked, so oil and sludge collect.

Immediate action:

1. Drain the scavenge space and check the drains are clear.
2. Inspect the ports at the next stop and clean them if deposits are heavy.
3. Check that no unit shows signs of a starting scavenge fire (high scavenge temperature, sparks at drains).

Permanent solution: Clean the ports and the scavenge space. Correct the cylinder oil feed rate. Find and fix the cause of blow-by or poor combustion.

Prevention:

- Drain the scavenge space every watch.
- Clean the scavenge space at the maker's intervals.
- Match cylinder oil feed rate and base number to the fuel in use.

PROBLEM 1.4

Fuel or exhaust timing out of adjustment

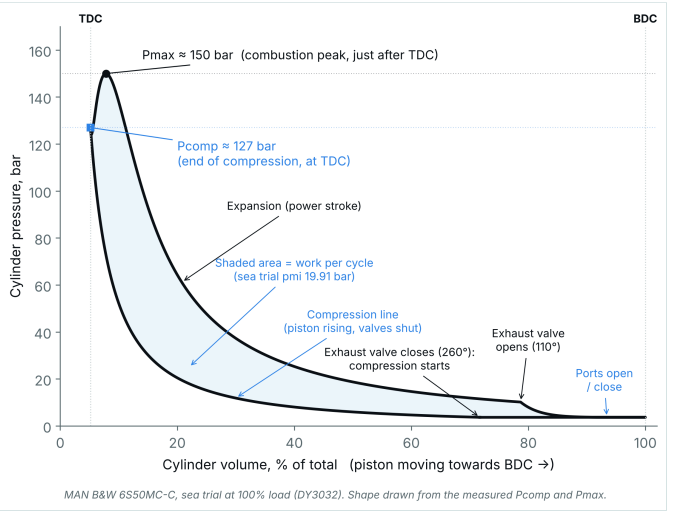

FIGURE 1.4 Indicator diagram of our engine at 100% load (sea trial): compression about 127 bar, maximum about 150 bar.

Signs on board:

- Pmax of one or more units different from the others at the same fuel index.
- Pmax too high (knocking, high bearing loads) or too low (high exhaust temperatures, poor economy).
- Indicator diagram shows ignition starting early or late.

Causes:

- Fuel cam or pump timing moved after overhaul, or a slipped coupling.
- VIT (variable injection timing) mechanism stuck or wrongly set.
- On electronic engines, a wrong setting in the engine control system.
- Exhaust valve timing wrong after overhaul.

Immediate action:

1. Take a full set of indicator readings and compare each unit with the shop test.
2. Check the VIT index and fuel pump lead for the affected units.
3. Reduce load if Pmax is above the maker's limit.

Permanent solution: Reset fuel pump lead or VIT and the exhaust valve timing to the maker's values, then confirm with new indicator readings.

Prevention:

- After any fuel pump or valve gear overhaul, check timing before full load.
- Fill in the performance record every day, and take indicator cards on every unit every two weeks (MAN B&W's advice for the S50MC-C).

PROBLEM 1.5

Black smoke at low load and during manoeuvring

Signs on board:

- Black smoke from the funnel when starting, at low speed or during sudden load increase.
- Scavenge air pressure low at that moment.
- Auxiliary blower alarms or blowers not running.

Causes:

- At low load the turbocharger cannot supply enough air, and the auxiliary blowers have not cut in.
- Auxiliary blower fault, or its pressure switch wrongly set.
- Load increased faster than the turbocharger can follow (turbo lag).
- Fouled air cooler or turbocharger air filter.

Immediate action:

1. Check that the auxiliary blowers are running at low load, and start them manually if needed.
2. Increase load slowly, following the engine's load-up programme.
3. Check the air cooler pressure drop and the turbocharger filter.

Permanent solution: Repair the blower or its control, check that the blowers cut in when scavenge air pressure falls to about 0.55 bar and cut out when it rises above about 0.7 bar, and clean the air cooler and filter.

Prevention:

- Test the auxiliary blowers in automatic before every arrival and departure.
- Clean air coolers and turbocharger filters at the maker's intervals.

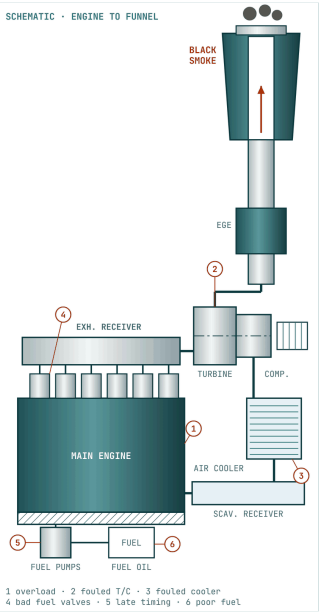

DETAIL Black smoke: follow the path from air intake and cooler to fuel pumps and funnel to find the cause.

⚠ SAFETY PRECAUTIONS

Before any inspection or work inside a cylinder unit, the scavenge space or the crankcase:

- Get a permit to work and follow the ship's safety management system.
- Stop the engine and tell the bridge. Engage the turning gear and put a warning notice on the engine control station.
- Close the main starting air valve, open the vent, and open the starting air line drains. Lock and tag them.
- Shut off fuel to the engine and stop the auxiliary blowers. Lock and tag the blower starters.
- Allow the engine to cool. Wait at least 20 minutes after stopping before opening a crankcase door.
- Ventilate the scavenge space or crankcase, and test the atmosphere for oxygen and hydrocarbons before entry.
- Keep a standby person outside, and keep communication with the control room.
- Use the turning gear only when everyone is clear of the moving parts, and tell the person inside before turning.
- Wear correct PPE: boiler suit, gloves, eye protection, and a torch rated for the space.
- After work, check that no tools or rags are left inside, and remove all locks and tags only when the job is signed off.

RULES ON BOARD

These rules touch the cycle directly. Chapter 15 covers them in full. *(Written: EKG. Oral: often asked as a follow-up.)*

- **MARPOL Annex VI, NOx (Regulation 13).** Every main engine over 130 kW needs an **EIAPP certificate** and a **NOx Technical File**. The limit depends on the ship's construction date and the engine speed. For engines below 130 rpm the limits are: Tier I 17.0 g/kWh, Tier II 14.4 g/kWh (ships built from 2011), and Tier III 3.4 g/kWh (in NOx Emission Control Areas, for ships built from the area's start date).
- **The cycle is part of the certificate.** Fuel valve nozzles, fuel pump and injection timing, exhaust valve timing, compression shims and the turbocharger are listed in the Technical File. Changing any of them away from the certified type or setting can take the engine out of compliance. Record every change of these parts in the **Record Book of Engine Parameters**.
- **MARPOL Annex I.** Oily drains from the scavenge space and stuffing boxes go to the sludge or drain tanks and are recorded in the **Oil Record Book**, never pumped overboard.
- **ISM Code.** Indicator readings, scavenge port inspections and exhaust valve overhauls are part of the ship's **planned maintenance system**. Record the results there, because they are the evidence an auditor or port state inspector asks for.

EXAM QUESTIONS AND ANSWERS

This section prepares you for both papers. **EKM** (Engineering Knowledge Motor) is the written paper on the main engine and other diesel machinery; **EKG** (Engineering Knowledge General) covers general engineering, safety and pollution rules. The oral questions below are the ten examiners ask most often on this chapter. The written questions come with an answer plan showing what to sketch and where the marks are. The full set (17 oral, 13 written and 10 multiple-choice questions) is in **Book 1B: Main Engine Exam Companion**, Chapter 1.

How to sketch it in the exam

Two sketches cover most questions on this chapter. Practise each until you can draw it in three minutes.

1. The timing diagram (EKM written and oral).

1. Draw a circle. Mark TDC at the top and BDC at the bottom, and add an arrow for the direction of rotation.
2. Mark injection a few degrees either side of TDC.
3. Mark exhaust valve opening (about 110°) and closing (about 260°) on the outer ring.
4. Mark the scavenge ports opening (about 140°) and closing (about 220°) on an inner ring, equal either side of BDC.
5. Shade and label the blowdown period (valve open, ports closed), the scavenging period (both open) and compression.

2. The uniflow cylinder (EKM). Draw the liner with the ring of ports near the bottom, the cover with one central exhaust valve, the piston near BDC, the piston rod through the stuffing box, and the crosshead. Add arrows for air swirling up from the ports and gas leaving through the valve. Label every part: a clear, labelled sketch usually carries a quarter to a third of the marks.

Oral questions

1. Describe the working cycle of a slow-speed two-stroke engine. (EKM oral: all countries)

The cycle is completed in one revolution. Near the bottom of the stroke the piston uncovers the scavenge ports, and pressurised air sweeps the exhaust gas out through the exhaust valve. The piston rises and covers the ports, the exhaust valve closes, and the air is compressed. Fuel is injected just before TDC and ignites from the heat of compression. The gas expands and drives the piston down. The exhaust valve then opens before the ports are uncovered, and the cycle repeats.

→ **Expect next: "At what crank angles?"**

2. Draw the timing diagram of a two-stroke crosshead engine and mark each event. (EKM oral: India, Bangladesh, UK MCA)

Start at top dead centre. Fuel injection begins a few degrees before TDC and ends a few degrees after. Combustion and expansion follow. The exhaust valve opens first, at about 110 to 120° after TDC. The scavenge ports open next, at about 140°. Bottom dead centre is at 180°. The ports close at about 220° and the exhaust valve closes last, at about 250 to 270°. Compression then runs to TDC. Mark the blowdown period (exhaust valve open, ports still closed) and the scavenging period (both open). These angles are typical; the exact figures for each engine are on its timing diagram.

→ **Expect next:** Why is the diagram symmetrical for the ports but not for the exhaust valve?

3. Compare uniflow and loop scavenging. (EKM oral: UK, India, Philippines)

In uniflow scavenging air enters through ports at the bottom and leaves through a valve at the top, so it travels one way. It gives better scavenge efficiency, allows a long stroke and less mixing of air and gas. Loop scavenging has inlet and exhaust ports both at the bottom; air loops up and back down. It is simpler, with no exhaust valve, but scavenging is poorer and it limits the stroke-to-bore ratio. All modern slow-speed engines use uniflow.

→ **Expect next:** Name an engine type that used loop scavenging.

4. Why must the exhaust valve open before the scavenge ports are uncovered? (EKM oral)

So that cylinder pressure falls below scavenge air pressure before the ports open. If the ports opened first, hot gas at high pressure would blow down into the scavenge space. That fouls the space, heats the air and can start a scavenge fire. The period between valve opening and port opening is called blowdown, and its gas energy drives the turbocharger.

→ **Expect next:** What happens to scavenging if the exhaust valve opens late?

5. What is the effect of the exhaust valve closing later than normal? (EKM oral)

Compression only starts when the valve closes, so a later closing shortens the effective compression stroke. The effective compression ratio falls, so compression pressure and temperature fall. Starting becomes harder, ignition is later, and Pmax drops. Closing it earlier does the opposite.

→ **Expect next:** How would you see this on an indicator card?

6. Why does a two-stroke slow-speed engine need auxiliary blowers? (EKM oral)

It has no suction stroke, so air must be pushed in under pressure. At low load and when starting, there is too little exhaust energy for the turbocharger to supply enough air. Electric auxiliary blowers start automatically when scavenge pressure falls to a low set point and stop again when it rises above a higher one. On our S50MC-C they cut in at 0.55 bar and out at 0.7 bar.

→ **Expect next:** What happens if the blowers fail during manoeuvring?

7. What are the advantages of a crosshead engine over a trunk-piston engine? (EKM oral)

The crosshead and guides take the side thrust, so the piston and liner do not. That allows a very long stroke and a slow speed, so the engine can drive a large, efficient propeller directly. The stuffing box seals the cylinder from the crankcase, so combustion residues and acidic cylinder oil stay out of the system oil, and the engine can burn heavy fuel. The cost is greater height and weight.

→ **Expect next:** What does the stuffing box do?

8. Compression pressure on one unit is low. What do you check? (EKM oral)

First confirm it with a fresh indicator reading against the other units and the shop trial. Then check the exhaust valve: closing time, air spring pressure, and any blowing at the seat. Then inspect through the scavenge ports: piston rings (broken, stuck or worn), liner wear and the piston crown. Low Pcomp on every unit points instead to low scavenge air pressure.

→ **Expect next:** What if Pcomp is normal but Pmax is low?

9. What is firing order, and how is it chosen? (EKM oral)

The order in which the cylinders fire. The designer chooses it to balance the forces and moments on the engine, keep main bearing loads even, and reduce torsional and axial vibration of the shafting. The firing order is stamped on the engine's plate and shown in the manual. You need it when setting fuel pump timing and when reading cylinder data.

→ **Expect next:** What is a critical speed?

10. Why is fuel injected a few degrees before TDC? (EKM oral)

There is a short ignition delay between the start of injection and the start of burning, while the droplets heat up and vaporise. Injecting just before TDC lets combustion start right around TDC, so peak pressure comes a little after TDC, where it does the most useful work. Too early raises Pmax and bearing loads; too late wastes fuel and overheats the exhaust valve and turbocharger.

→ **Expect next:** What factors affect ignition delay?

Written questions

W1. Describe the following terms with respect to a diesel engine, with suitable diagrams: (a) natural aspiration (4); (b) scavenging (4); (c) types of supercharging in a two-stroke engine (4); (d) supercharging (4).

(a) **Natural aspiration:** the engine takes in air at atmospheric pressure only, drawn in by the piston moving down on the suction stroke. No blower or turbocharger is used. It is found only on four-stroke engines, because a two-stroke has no suction stroke and cannot fill its cylinder this way.

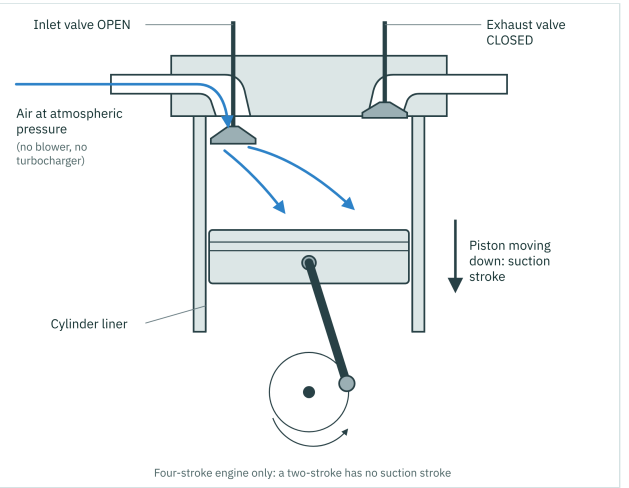

EXAM SKETCH Natural aspiration: four-stroke cylinder on the suction stroke, inlet valve open.

(b) **Scavenging:** in a two-stroke engine, the removal of exhaust gas from the cylinder by a flow of fresh air under pressure, which also fills the cylinder for the next compression. In a slow-speed engine it is uniflow: air enters through ports at the bottom of the liner when the piston uncovers them, swirls upward, and pushes the gas out through the exhaust valve in the cover. Other types are loop and cross scavenging, where inlet and exhaust ports are both in the liner.

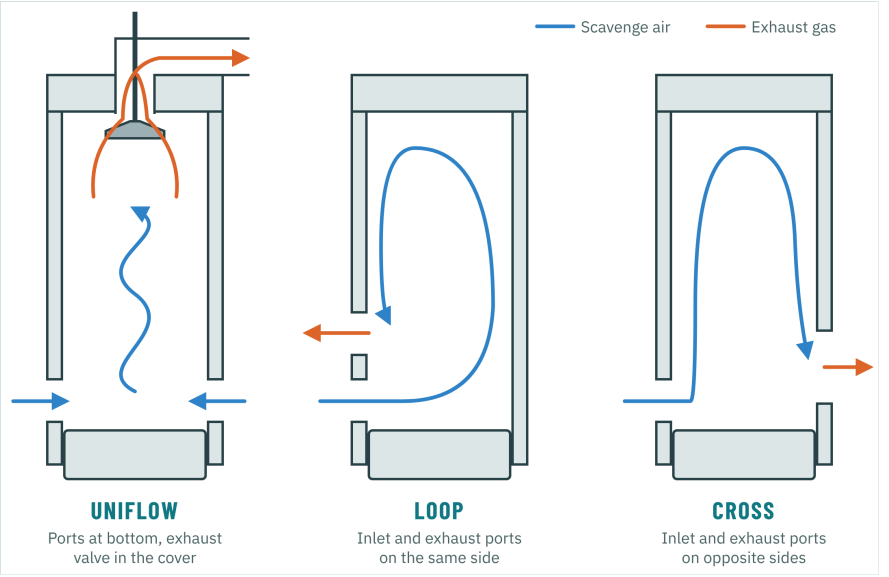

EXAM SKETCH Uniflow, loop and cross scavenging, with the air and gas flow.

(c) **Types of supercharging in a two-stroke engine:**

1. Mechanical: a blower (for example a Roots blower) driven from the crankshaft. Simple, but it takes engine power.
2. Exhaust gas turbocharging: the turbocharger uses exhaust energy, with no load on the crankshaft. It is used on all modern engines, in two forms: constant-pressure (all exhausts into a large receiver, steady flow to the turbine, best at high load) and pulse (short separate pipes so the turbine uses the pressure pulses, better at low load; found on older engines).
3. Turbocharger with electric auxiliary blowers in series: the blowers supply air at starting and low load, when the turbocharger cannot.
4. Older engines used under-piston scavenging, with the underside of the piston acting as a pump, in series or parallel with the turbocharger.

(d) **Supercharging:** supplying air to the cylinder at more than atmospheric pressure, so a greater mass of air is trapped. More fuel can then be burned in the same cylinder, raising power output for the same engine size. The charge air cooler after the compressor cools the air, making it denser and lowering thermal load on the engine.

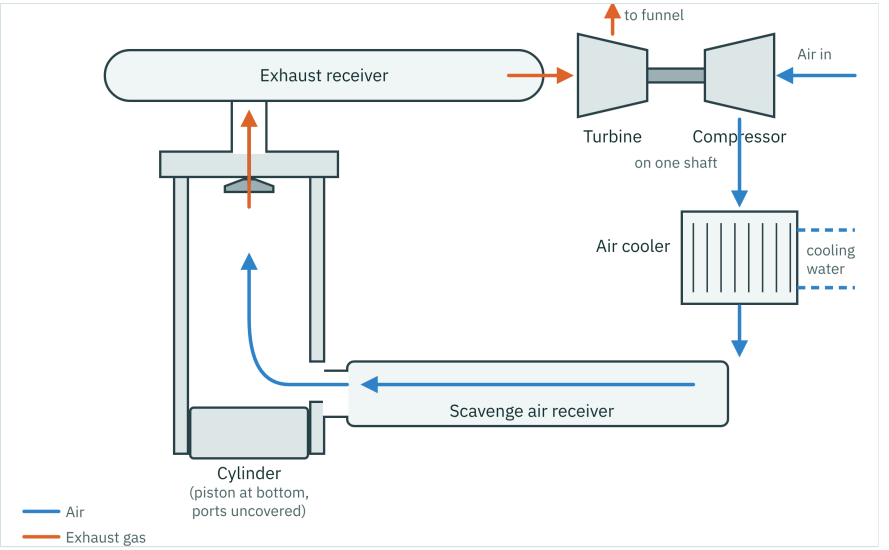

EXAM SKETCH Exhaust gas turbocharging: the air and gas path through the engine.

W2. (a) Explain why a diesel engine cylinder is supplied with excess air. (b) Explain why fuel droplet size must be kept within narrow limits for good combustion. (c) Explain how the injector produces the right droplet size. (d) State why injection timing must be kept within narrow limits.

(a) Fuel needs a set amount of oxygen to burn completely, but in the short time available not every fuel droplet meets enough air. Excess air makes sure all the fuel burns, keeps the combustion temperature down, cools the exhaust valve and piston crown, and helps sweep out the exhaust gas during scavenging.

(b) Droplets that are too large burn slowly, continue burning late in the stroke and leave carbon; they can hit the liner and wash away the oil film. Droplets that are too small do not travel far enough into the air charge, so air near the liner is not used.

(c) Fuel at high pressure is forced through small nozzle holes. The pressure drop gives the fuel high speed, and the fuel breaks into fine droplets as it meets the dense, hot air. Droplet size depends on injection pressure, nozzle hole size and condition, and fuel viscosity.

(d) If injection is too early, pressure rises before TDC: Pmax and bearing loads are too high, and the engine knocks. If it is too late, combustion goes on into the expansion stroke: Pmax is low, exhaust temperature and fuel consumption rise, and the exhaust valve and turbocharger run hot.

W3. (a) Sketch the p-V diagram of a two-stroke diesel engine and label each process (6). (b) Define mean indicated pressure and explain how it is used to find indicated power (4). (c) A 6-cylinder two-stroke engine has a bore of 500 mm and a stroke of 2,000 mm. At 120 rpm the mean indicated pressure is 20 bar. Calculate the indicated power and, for a mechanical efficiency of 95%, the brake power (6).

ANSWER PLAN:

- (a) Draw pressure up, volume across. Show compression, the near-vertical rise at TDC (constant volume burning), the short flat top (constant pressure burning), expansion, then the drop at exhaust valve opening and the scavenging line. Mark TDC, BDC, exhaust valve opening and closing, and ports opening and closing. Six marks: about four for a correct, labelled shape and two for naming the processes.
- (b) pmi is the constant pressure that would do the same work over the power stroke as the real cycle. It equals the card area ÷ card length × spring scale in bar per mm (Chapter 13). Then Pi = pmi × A × L × N per cylinder, with one power stroke per revolution on a two-stroke.
- (c) Use the worked example in *Theory and calculations*: Pi = 1,568 kW per cylinder, 9,408 kW for the engine, brake power about 8,940 kW. Show every line with units: most marks are for the method, not only the answer.

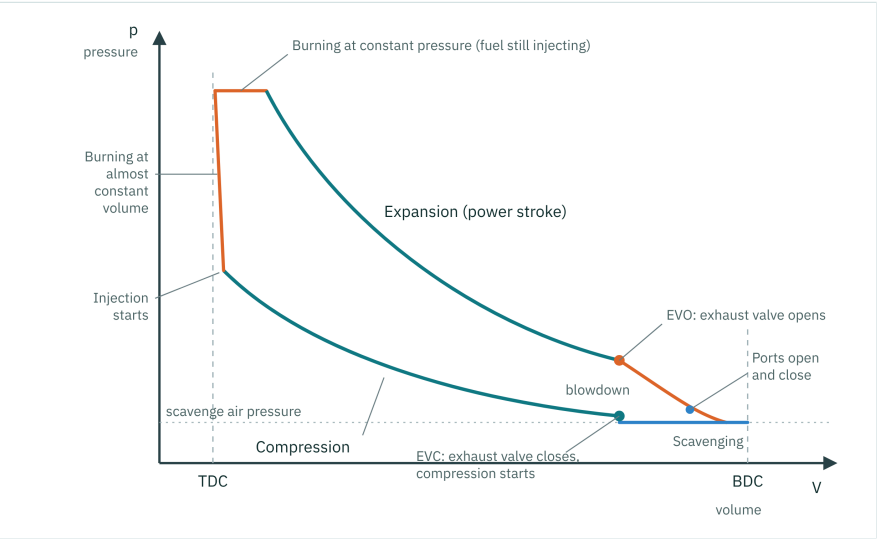

EXAM SKETCH Two-stroke p-V diagram with each process and the valve and port events marked.

EXAM TIP

for W1 and W2: both are "describe and explain" questions. Start each part with a one-line definition, add a labelled sketch where the question says "with diagrams", then give reasons. Examiners give marks per correct point, so short numbered points score better than one long paragraph.

QUICK REVISION

Read this the night before the exam.

- One revolution = one complete cycle, so every downstroke is a power stroke.
- Uniflow: air in through ports at the bottom, gas out through one valve at the top.
- Typical timing: injection about 3° before to 18° after TDC; exhaust valve opens about 110° and closes about 260°; ports open 140° and close 220°, equal about BDC.
- Exhaust valve opens before the ports (blowdown) so gas cannot blow into the scavenge space.
- Exhaust valve closing sets the effective compression ratio, and so Pcomp.
- Compression: p2 = p1 × r^n, T2 = T1 × r^(n – 1), with n about 1.35. End temperature above 500 °C.
- Two-stroke indicated power per cylinder: Pi = pmi × A × L × N, with N in rev/s.
- Mean piston speed = 2 × L × rpm ÷ 60, about 8.0 m/s on our S50MC-C at 120 rpm.
- Full load on our S50MC-C (sea trial): scavenge air 2.65 bar, Pcomp about 127 bar, Pmax about 150 bar. Typical slow-speed range: Pcomp 120 to 180 bar, Pmax 140 to 200 bar.
- Low Pcomp on one unit: rings, liner, exhaust valve. On all units: scavenge air.
- Normal Pcomp but low Pmax: injection (timing, fuel valve, fuel pump, fuel quality).
- NOx: EIAPP certificate, NOx Technical File, Record Book of Engine Parameters. Below 130 rpm: Tier I 17.0, Tier II 14.4, Tier III 3.4 g/kWh.

WATCH THE VIDEO

The animation shows one full revolution in motion, with the exhaust valve, ports and injection marked as they open and close.

FULL VIDEO LESSON

Scan to watch the Chapter 1 lesson on the Engine Room Explained channel.

youtu.be/k7fKDcHJpdY

Watch it once before reading the chapter again. Then pause it at each stage and say aloud what the valve, the ports and the fuel are doing.

EXAM PRACTICE

MULTIPLE-CHOICE QUESTIONS

Ten exam-style questions on Chapter 1, in the multiple-choice format used in written COC and MARINA engine examinations. Answers are at the end.

1. In a uniflow-scavenged two-stroke engine, fresh air enters through ___ and exhaust gas leaves through ___.

a) the exhaust valve / the scavenge ports
b) scavenge ports at the bottom of the liner / a single exhaust valve in the cylinder cover
c) scavenge ports / exhaust ports in the liner
d) an inlet valve / an exhaust valve

2. Why must the exhaust valve open before the scavenge ports are uncovered?

a) To let cylinder pressure fall below scavenge air pressure, so hot gas does not blow back into the scavenge space
b) To raise the compression pressure
c) To reduce fuel consumption
d) To cool the exhaust valve seat

3. At low load and when starting, the scavenge air is supplied mainly by:

a) the turbocharger alone
b) the starting air system
c) natural aspiration through the ports
d) the electric auxiliary blowers

4. On a typical slow-speed uniflow engine, the piston uncovers the scavenge ports at about:

a) 18° after TDC
b) 110° after TDC
c) 140° after TDC
d) 260° after TDC

5. If the exhaust valve is set to close later, the compression pressure will:

a) rise
b) fall
c) stay the same
d) rise only at low load

6. Fuel ignites in a diesel engine without a spark because, at the end of compression, the air temperature is above about:

a) 150 °C
b) 300 °C
c) 1,000 °C
d) 500 °C

7. The indicator card shows low compression pressure on one unit, while all the other units are normal. The most likely cause is: ON WATCH

a) a leaking exhaust valve or worn piston rings on that unit
b) a fouled turbocharger
c) low fuel oil temperature
d) high jacket cooling water temperature

8. A 6-cylinder two-stroke engine has a bore of 500 mm and a stroke of 2,000 mm. It runs at 120 rpm with a mean indicated pressure of 20 bar. Its indicated power is closest to: CALCULATION

a) 1,568 kW
b) 4,704 kW
c) 9,408 kW
d) 18,816 kW

9. **On a uniflow engine, the effective compression ratio is lower than the geometric one because:**

a) the clearance volume grows when the engine is hot

b) the piston rings leak at low speed

c) scavenge air pressure is below atmospheric

d) compression starts only when the exhaust valve closes

10. **On electronically controlled ME-C and ME-B engines, fuel injection and exhaust valve timing:**

a) are fixed by the camshaft

b) can change with load while the engine is running

c) can only be changed in dry dock

d) are controlled by the scavenge ports

Answers

1. b Air and gas travel one way only, bottom to top: that is uniflow scavenging.

2. a If the ports opened while cylinder pressure was still high, gas would blow into the scavenge space, fouling it and risking a scavenge fire.

3. d The turbocharger takes over at normal load; the auxiliary blowers cover low load and starting.

4. c The ports open 40° before BDC (140°) and close 40° after it (220°).

5. b Less air is trapped, so the effective compression ratio falls.

6. d Compressed air passes 500 °C, far above the fuel's self-ignition temperature.

7. a A fault on one unit points to that unit; a turbocharger problem would affect every cylinder.

8. c $20 \times 10^5 \times 0.196 \times 2.0 \times 2 = 1{,}568$ kW per cylinder; × 6 = 9,408 kW.

9. d Compression cannot begin until the exhaust valve closes, so the trapped volume is smaller.

10. b Electronic control lets injection and valve timing change with load while running.

ENGINE ROOM EXPLAINED · BOOK 1

You have read Chapter 1. There are 14 more.

The full book takes the same approach through the whole engine: structure and running gear, piston and stuffing box, liner and cylinder lubrication, turbocharger, exhaust valve, fuel injection, starting air, lube oil, cooling water, control and safety, emergencies, performance, the electronic ME-C and ME-B engines, and the rules.

Every chapter: how it works, what goes wrong, how to fix it, with oral exam questions, model answers and a full video lesson.



Get the full book: engineroomexplained.com

Out now · Book 1 buyers get 30% off Book 2